CIRCUIT DIAGRAM DAP6040

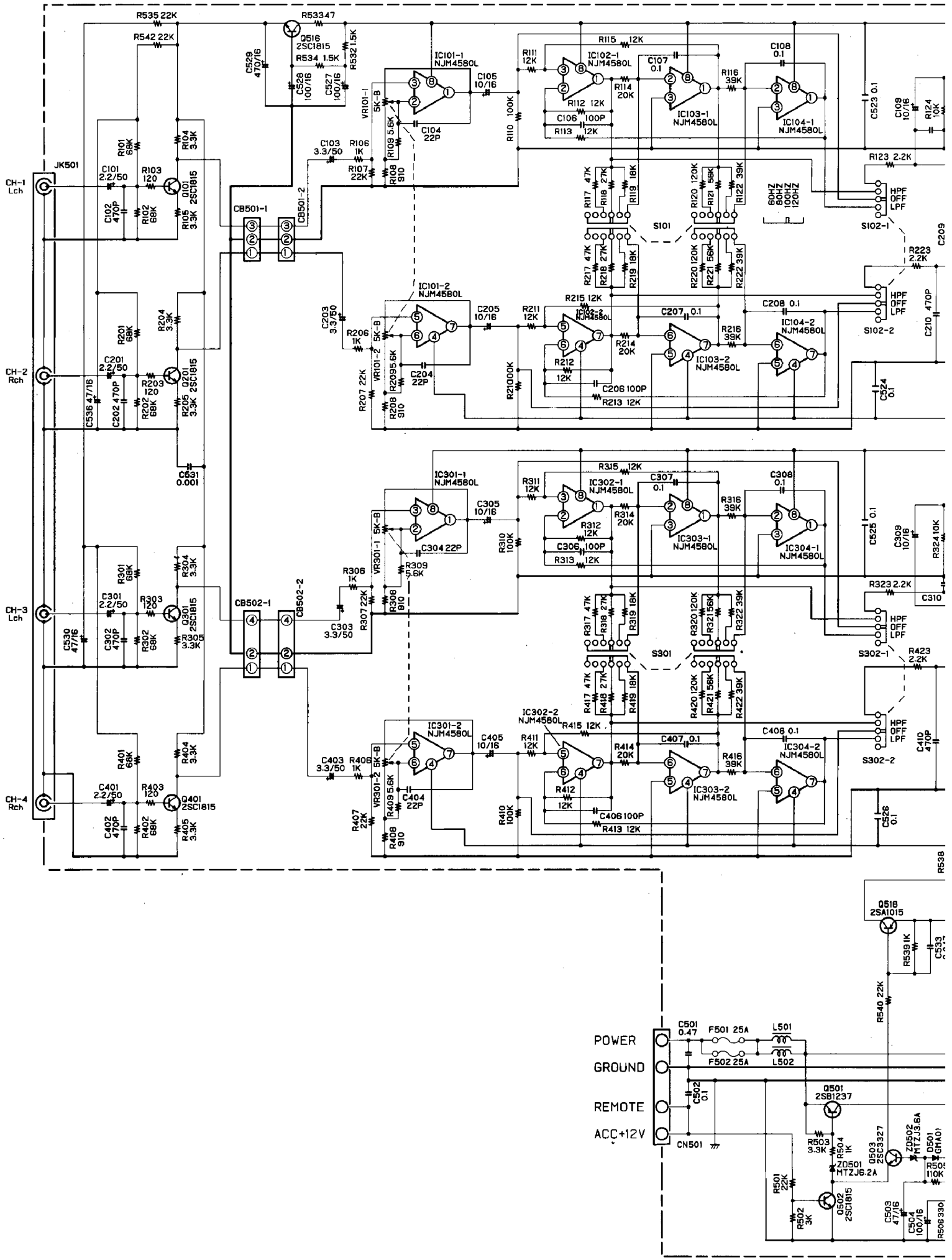

PCS 82 348 GB

www.electronicsrepair.net

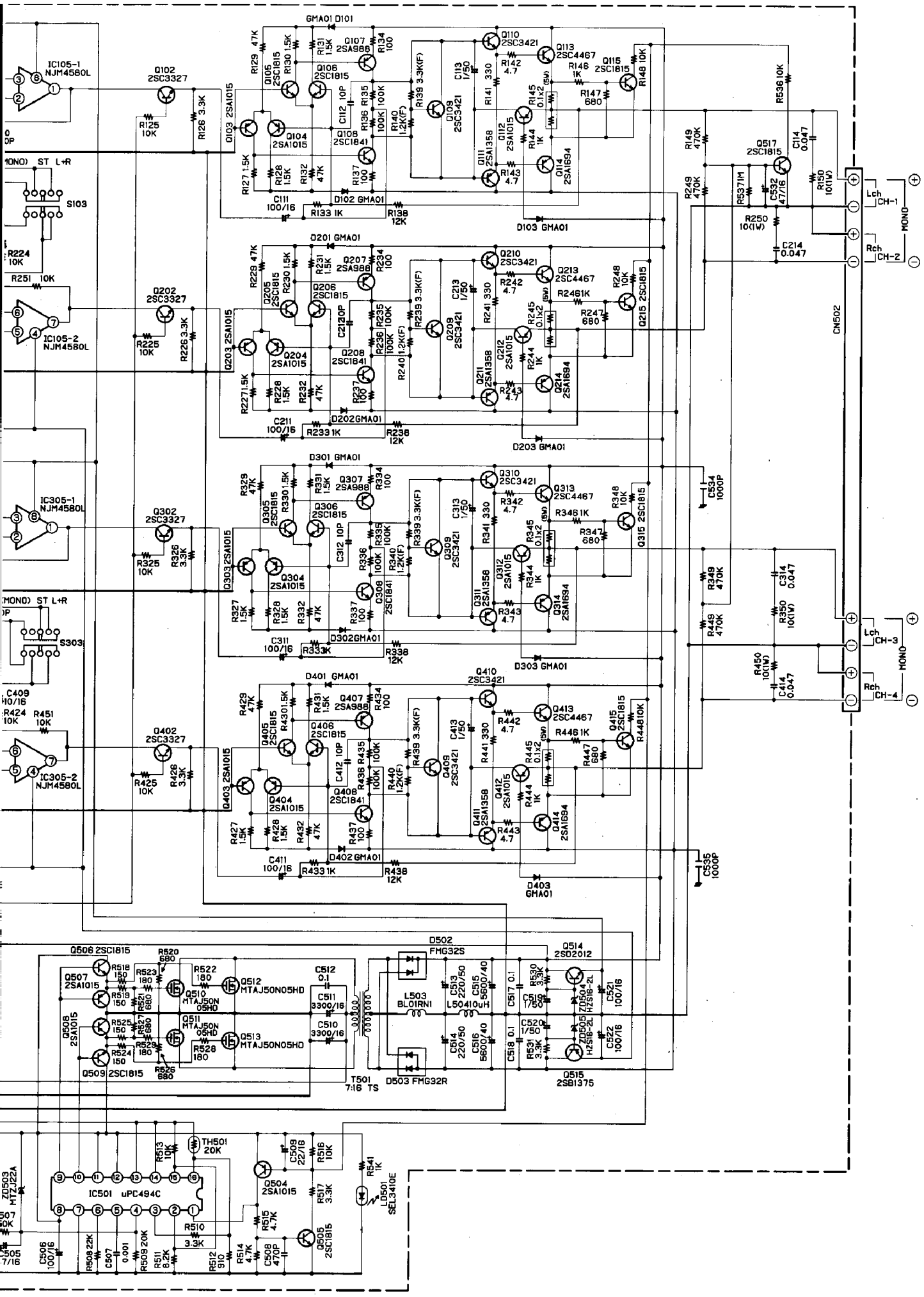

www.electronicsrepair.net